REVISION RECORD				
REV	ECN.	DESCRIPTION	DRFT	DATE

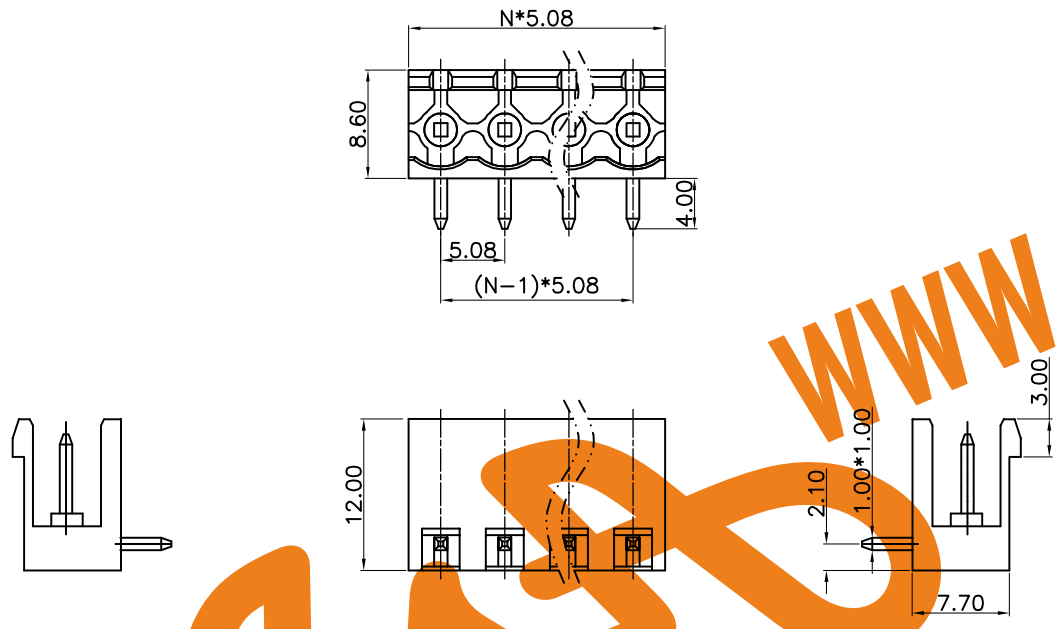

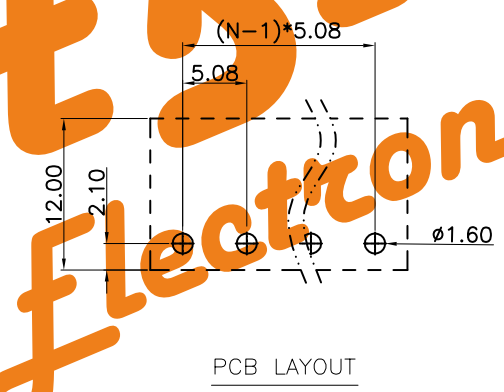

PCB LAYOUT

N=No.of contacts

NOTE 1:
UL标准(UL Standard)
1. 额定电压与电流: 300V/15A
Rated voltage/Rated current:300V/15A
2. 功频耐压: AC1600V/Min
Withstanding Voltage:AC1600V/Min
IEC标准(IEC Standard)
1. 额定电压与电流: 320V/20A
Rated voltage/Rated current: 320V/20A
NOTE 2:
1. 间距(Pitch): 5.08mm
2. 使用温度范围: -40℃～+105℃
Operating temperature: -40℃～+105℃
3. 符合RoSH环保要求
RoHS Compliance
5. 未标注公差表
Undimensioned tolerances

P距方向公差 (mm) Pitch range in mm			其他尺寸公差 (mm) Nominal dimension range in mm					—	⌒	⌭
≤6	6 ~ 10	10 ~ 24	≤30	30 ~ 60	60 ~ 100	100 ~ 150	> 150	0.1/10 ∠		
±0.15	±0.20	±0.30	±0.20	±0.30	±0.50	±0.70	±1.00	±1°		

WWW.AsA-Elec.com
AsA Electronic
AsA Electronic Co.
Tel : (+98) 21 66 73 56 82 Mob : (+98) 912 03 161 02

2	(Pin header)焊脚	(Copper alloy) 铜合金	(Sn plated)镀锡
1	(Housing)塑件	PA66	UL94V-0
ITEM	NAME OF PART	MATERIAL	NOTES

PART NO.: /	ASA 2EDG-5.08MM		
APPD: /			
CHKD: /	型号		
DRFT: /	系列	2EDG 5.08	页码 1/1
THIED ANGLE PROJECTION	图号	2EDG 508001	比例 1:1

File No.	689EB12806	SHEET	1/1

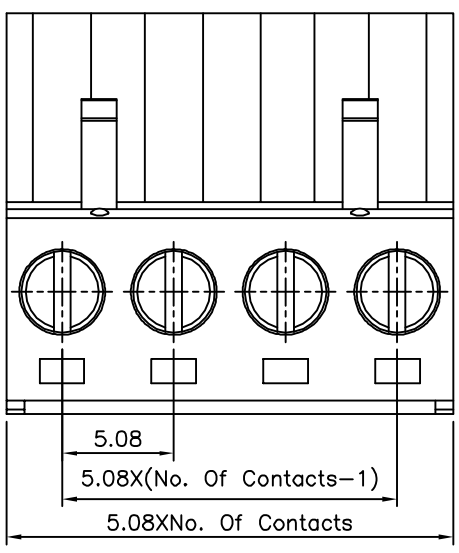

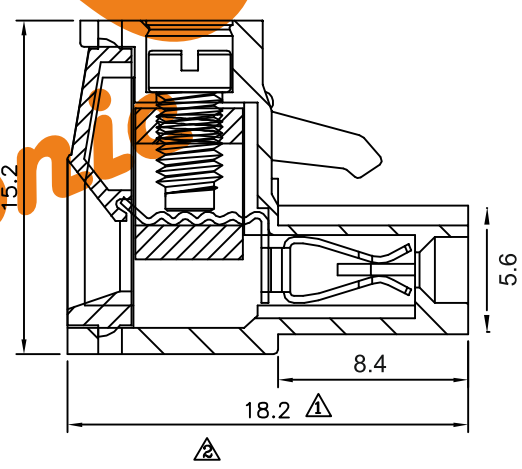

SPECIFICATION
Current Rating:16 Amp/Way Max.
Voltage Rating:300V AC
Contact Resistance:20 Milliohms Max.
Withstanding Voltage:2500V AC(1 Minute)
Test Time=60 Sec./1 PCS
Operation Temperature:−40°C~+105°C
Soldering Reliability:Test Temperature=250°C±10°C/
5 Seconds Max.
Wire Range:12~26 AWG
Torque:5.0 Kgf.cm/M3
Insulator Body(Housing):Polyamide(UL94V−0),Green
Contact(Metal Housing):Copper Alloy,Nickel Plated
Wire Guard:Copper Alloy,Tin Plated
Screw:Steel,Galvanized With Cr3+ Plated
RoHS Compliant

WWW.AsA-Elec.com
AsA Electronic
AsA Electronic Co.
Tel : (+98) 21 66 73 56 82 Mob : (+98) 912 03 161 02

DRAWING No.	APPROVED BY	CHECKED BY	DRAWING BY	UNLESS OTHERWISE SPECIFIED TOLERANCES ARE
19868	EMILY	HZF	YBL	X. ±0.50 .X ±0.30 .XX ±0.20 ANG. ±1°
SCALE NONE	REV. A3			UNIT mm

NO.	REV.	REVISIONS	CHK	DATE
3	A3	Modify Spec.	HZF	02/12/2014
2	A2	Modify Data	HZF	12/16/2011
1	A1	Modify Data	HZF	06/29/2010
0	A0	NEW RELEASE	HZF	04/10/2009